BTF810

FLAT SCREEN DISPLAY STAND
WITH SHELF

Part of B-Tech's Cantabria range of premium AV furniture, the BTF800 has a modern, stylish aesthetic quality that is ideally suited to high-end residential or commercial applications. Manufactured in Europe, this flat screen TV stand is produced to a very high standard, with a sleek design that features a high gloss finish and a tempered glass shelf. The stainless steel upright includes integrated cable management and rotates a full 360° while the square base benefits from concealed castors.

SPECIFICATIONS

Recommended screen size	up to **60"**
Max load	**35kg**
Max accessory shelf load	**10kg**
VESA® & non-VESA fixings	up to **600** x **400**
Revolving base	**360°**
Dimensions	W : **1637mm** H Min : **450mm** Max : **1010mm** D : **500mm**
Shelf dimensions	W : **450mm** D : **365mm**
Colour option	**Black**

FEATURES

1. Stainless steel finish
2. Swivel adjustment up to 60°
3. Concealed castors and cable management
4. Tempered glass shelves toughened to BS6206A standard

- High gloss and premium finish
- Includes accessory shelf
- Pre-assembled
- 2 mounting height options (depending on desired height of screen)
- Additional shelf BT7166 available separately

Cantabria

RECOMMENDED MAX SCREEN	MAX LOAD INTERFACE	MAX LOAD SHELF	MAX VESA	POST INSTALL ALIGNMENT	SWIVEL
60" 152cm	35kg	10kg	600 x 400		360°

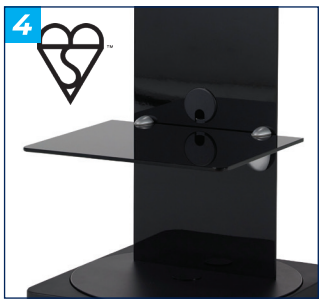

BTF810

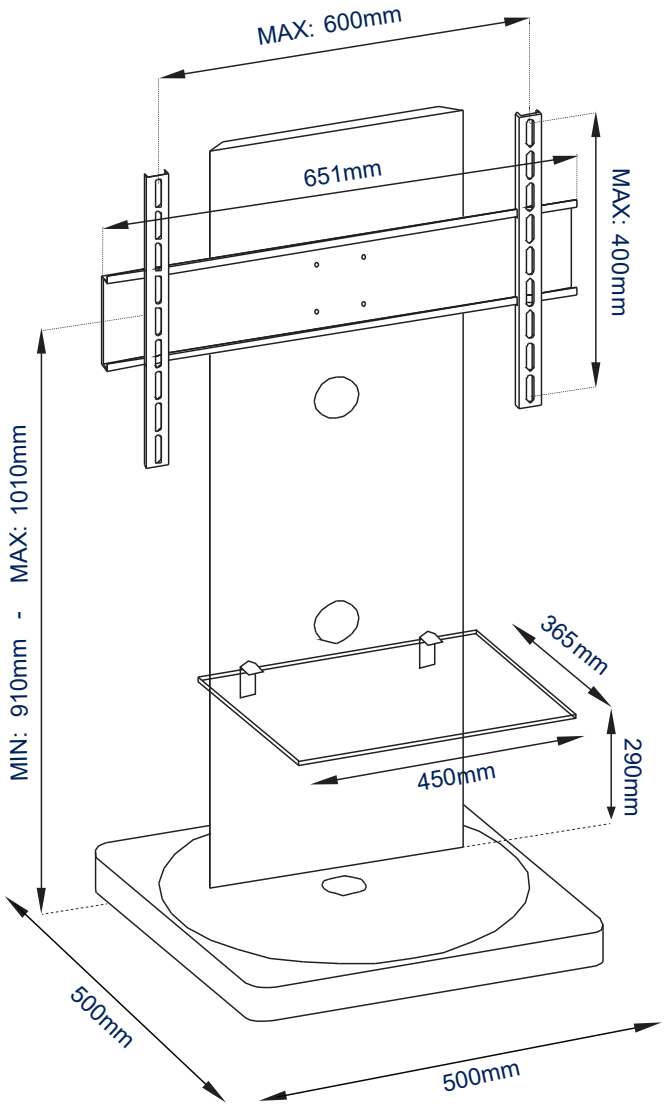

ORDERING INFORMATION

COLOUR	ORDER REF	EAN
Black	BTF810/B	5019318651014

RELATED PRODUCTS

PRODUCT CODE	NAME	DESCRIPTION
BT7166	Accessory Shelf	Designed to mout AV accessories to a selection of B-Tech stands
BTF800	Flat Screen TV Stand with Square Base	Sleek design that features a high gloss finish and a tempered glass shelf
BTF801	Flat Screen TV Stand with Round Base	Has a modern, stylish aesthetic quality
BTF808	Flat Screen TV Cabinet with Glass Top	Sleek design that features a high gloss finish and a tempered glass top

© 2024 B-Tech AV Mounts Corporation Ltd. All rights reserved.
The information in this specification sheet affects the current technical specifications at the time of print.
We reserve the right to change specifications without prior notice. The B-Tech name and the B-Tech logo are registered trademarks of B-Tech AV Mounts Co. Ltd
All other brands and products are trademarks of their respective owners. All B-Tech images and symbols are exclusive property of B-Tech AV Mounts Co. Ltd
B-Tech accepts no liability for loss or damage caused by improper installation or mounting on unsuitable structures. Any reproduction or retransmission or republication of any part of this
document without the prior written permission is strictly prohibited by B-Tech AV Mounts Co. Ltd 2024.

SS-V2-BTF810-180924